ROITHNER LASERTECHNIK GmbH
WIEDNER HAUPTSTRASSE 76 1040 VIENNA AUSTRIA
TEL. +43 1 586 52 43 -0, FAX. -44 OFFICE@ROITHNER-LASER.COM

IQ800L

- **Si Photodiode with integrated TIA**
- **Range of Sensitivity 400 – 1100 nm**
- **High Dynamic range**
- **Hermetically Sealed TO-5 Can**
- **Hemispherical Glass Lens**

Description

IQ800L is a Si photodiode with an active area of 4.8 mm² and integrated transimpedance amplifier with **100 MΩ feedback resistor** and capacitor. It has a range of sensitivity from 400 – 1100 nm, featuring high dynamic range and low noise. **IQ800L** comes in a hermetically sealed **TO-5 Can package with hemispherical glass lens.**

Variants with 1 MΩ (IQ802L) & 10 MΩ (IQ801L) feedback resistor or with flat window glass cap are available on request.

Maximum Ratings*

Parameter	Symbol	Values Min.	Max.	Unit
Supply Voltage	U_S		±18	V
Operating Temperature	T_{OP}	- 25	+ 85	°C
Storage Temperature	T_{STG}	- 40	+ 100	°C
Lead Solder Temperature ($t_{max.}$ 3s)	T_{SLD}		+ 260	°C

***** Operating close to or exceeding these parameters may damage the device

Electro-Optical Characteristics (T_{CASE} = 25°C, U_S = ±15V)

Parameter	Symbol	Values Min.	Typ.	Max.	Unit
Active Area	A		4.8		mm²
Range of Sensitivity ($S = 0.1*S_{MAX}$)	λ		400 …1100		nm
Peak Sensitivity Wavelength	λ_P		850		nm
Feedback Resistor	***R***		**100**		**MΩ**
Responsivity @ λ_P	S_{MAX}		100		mV/nW
Dark Offset Voltage	U_F		± 2		mV
Noise Voltage (rms, B = 20 kHz)	U_N		0.5		mV
Bandwidth (- 3 dB)	Δf		10		kHz
Rise Time	t_r		35		µs
Viewing Angle (FWHM)	$2\theta_{1/2}$		100		deg.
Supply Voltage	U_S	± 5		± 15	V
Saturation Voltage (U_S = ±15V R_L = 2 kΩ)			- 14.8	- 14.5	V
Short Current	I_{SC}		± 45		mA
Current Consumption	I_S		2.2	2.6	mA

ROITHNER LASERTECHNIK GmbH
WIEDNER HAUPTSTRASSE 76 1040 VIENNA AUSTRIA
TEL. +43 1 586 52 43 -0, FAX. -44 OFFICE@ROITHNER-LASER.COM

Typical Performance Curves

Rel. Spectral Responsivity vs. Wavelength

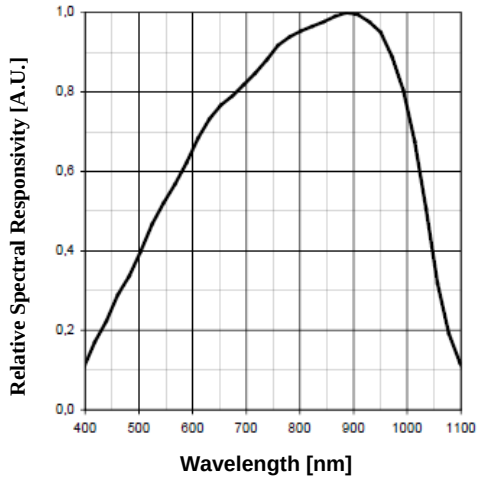

Rel. Spectral Responsivity vs. Viewing Angle

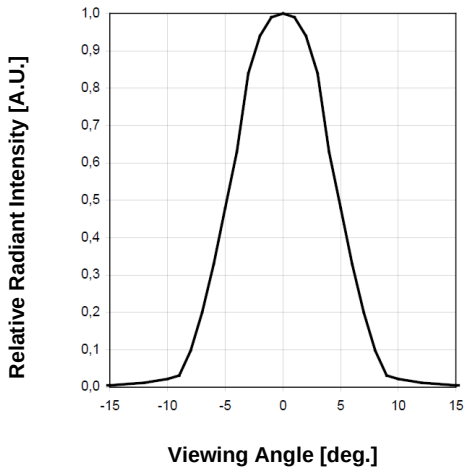

Electrical Connection

Pin Configuration

Pin #	Function
Pin 1	GND
Pin 2	U_O
Pin 3	+ U_S
Pin 4	- U_S
Pin 5	Case

Schematics

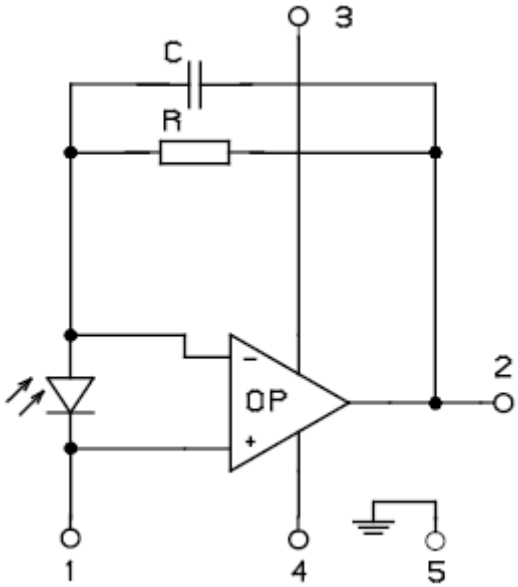

ROITHNER LASERTECHNIK GmbH
WIEDNER HAUPTSTRASSE 76 1040 VIENNA AUSTRIA
TEL. +43 1 586 52 43 -0, FAX. -44 OFFICE@ROITHNER-LASER.COM

Outline Dimensions

TO-5 Bottom View

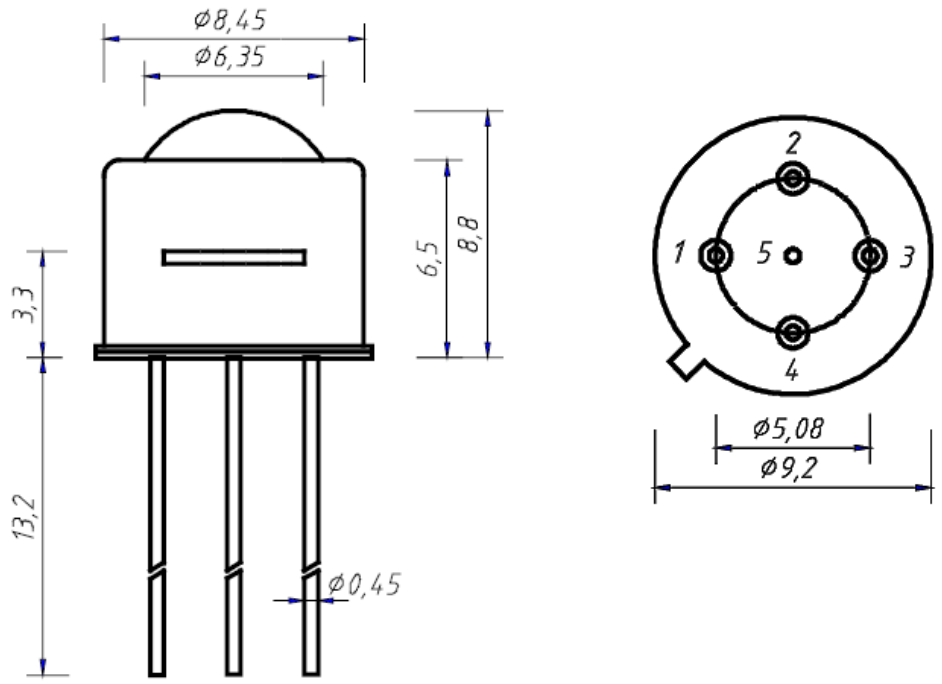

all dimensions in mm

© All Rights Reserved
The above specifications are for reference purpose only and subjected to change without prior notice